No.E13018

Mitutoyo

Non-contact, high-accuracy measurement system

Laser Scan Micrometer
LSM-6902H

Mitutoyo Quality

The laser beam shown is simulated for the purpose of illustration.

Sensor Systems

NEW Products

Non-contact, high-accuracy measurement system

Laser Scan Micrometer
LSM-6902H

Features

- Demonstrates the best repeatability available in the 25mm class.
- The ultra-precise scanning motor enables the highest measurement accuracy to be realized.
- Thanks to excellent linearity, an accuracy of ±0.5µm over the entire measuring range and a higher accuracy of ±(0.3+0.1ΔD) over a narrow range are guaranteed.
- The optimal solution for measuring the outside diameter of pin gages or plug gages.

Specifications

Set Order No.	544-497* (mm)	544-498* (mm)	544-499*(mm/inch)
Applicable standards	JIS	IEC · FDA	

Measuring unit

Measuring range		0.1 to 25mm (0.004 - 1.0 in)
Resolution		0.01 to 10µm (selectable) (0.000001 - 0.0005 in)
Repeatability*1	Whole range	±0.045µm (±0.0000018 in) (ø25mm)
	Narrow range	±0.03µm (±0.0000012 in) (ø10mm)
Accuracy*2 (20°C)	Whole range	±0.5µm (±0.000020 in)
	Narrow range	±(0.3+0.1 ΔD) [D:mm] ±(0.000012+0.1 ΔD) [D:inch]*5
Movement error*3		±0.5µm
Measuring region*4		±1.5mm×25mm (±0.006×1.0 in)
Scanning rate		1600 scans/s
Laser wavelength		650nm (visible)
Laser scanning speed		112m/s
Operating environment	Temperature	0 to 40°C
	Humidity	RH 35 to 85% (non-condensing)

Display unit

Display	16-digit plus 11-digit fluorescent display, and guide message LED
Segment	1 to 7 (1 to 3, transparent) or 1 to 255 edges
Averaging times	Arithmetic average: 1 to 2048 scans. Moving average: 32 to 2048 scans.
Judgment	Selection from "target value + tolerance", "lower tolerance + upper tolerance", or "7 classes multilimit tolerance zone".
Measurement mode	Standby, Single measurement, Continuous measurement
Statistical analysis	Maximum, Minimum, Average, Dispersion, (S.D)
External dimensions	335(W)×134(H)×250(D)mm
Power supply	100 to 240VAC ±10% 50W 50/60Hz
Standard I/F	RS-232C, Analog I/O
Optional I/F	Digimatic code output unit (2-ch), 2nd I/O analog I/F, BCD I/F
Operating environment	0 to 40°C, RH 35 to 85% (non-condensing)
Others	Nominal setting, sample setting, suppression of unnecessary digits, transparent object measurement, automatic measurement in edge mode, output timer, abnormal data elimination, SHL change, group judgment, simultaneous measurement, statistical processing, mastering, buzzer function, automatic workpiece detection (dimension/position), zero-set/offset Note: In the case of dual measuring-unit connection, extra-fine line measurement and some of the communication commands are not available.

*1: At the 2σ level in the case where ø25mm and ø10mm diameters are measured using a measurement time of 1.28 seconds (2048 scans on average) *2: The value at the center of the measuring range
*3: The additional error (in outside diameter) caused by workpiece movement within the measuring envelope during the measuring cycle *4: Length along optical axis × Scanning length (Measuring range)
*5: ΔD is the difference in outside diameter between the master gage and workpiece.
Note: To denote your AC power cable add the following suffixes to the order No.: A for UL/CSA, D for CEE, DC for CCC, E for BS, F for SAA, K for KC, C and No suffix are required for PSE.

Dimensions

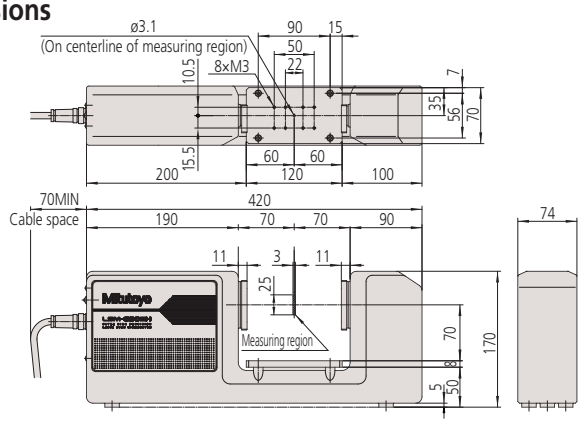

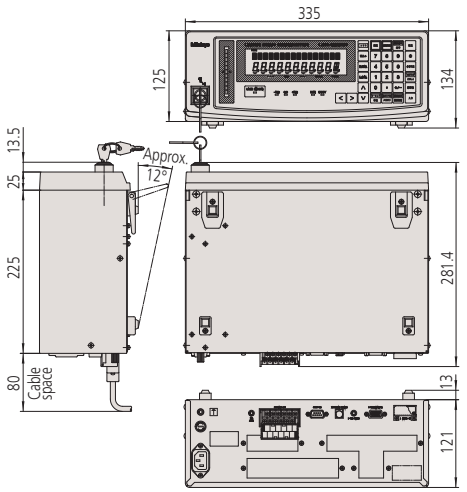

Please contact your local Mitutoyo Sales Office for more details.

Mitutoyo Corporation
20-1, Sakado 1-Chome,
Takatsu-ku, Kawasaki-shi,
Kanagawa 213-8533, Japan
T +81 (0) 44 813-8230
F +81 (0) 44 813-8231
http://www.mitutoyo.co.jp

Find additional product literature and our product catalogue

http://www.mitutoyo.co.jp/global.html

Our products are classified as regulated items under Japanese Foreign Exchange and Foreign Trade Law. Please consult us in advance if you wish to export our products to any other country. If the purchased product is exported, even though it is not a regulated item (Catch-All controls item), the customer service available for that product may be affected. If you have any questions, please consult your local Mitutoyo sales office.

Note: All information regarding our products, and in particular the illustrations, drawings, dimensional and performance data contained in this pamphlet, as well as other technical data are to be regarded as approximate average values. We therefore reserve the right to make changes to the corresponding designs, dimensions and weights. The stated standards, similar technical regulations, descriptions and illustrations of the products were valid at the time of printing. Only quotations submitted by ourselves may be regarded as definitive.

Coordinate Measuring Machines
Vision Measuring Systems
Form Measurement
Optical Measuring
Sensor Systems
Test Equipment and Seismometers
Digital Scale and DRO Systems
Small Tool Instruments and Data Management

017 1803(1) A-(TX)TX, Printed in Japan