Mitutoyo

Mitutoyo Quality

Small Tool Instruments and Data Management

Lever Type Dial Indicators
Dial Test Indicators

Catalog No. E12035(4)

Lever Type Dial Indicator
Dial Test Indicator

Easy-to-read dial

- Glare-free flat crystal face allows easy reading of graduations.
- Multi-layer and composite coatings allow a stain repellent, anti-reflective crystal.

Conventional New

Improved visibility

- Using universal fonts, changing dial face color and reviewing the relationship between pointer and scale marks have drastically improved visibility.

Conventional New

Attachable limit hands

- Limit hands (optional) can be attached to the bezel the same as for dial indicators, allowing easy identification of the upper and lower limits of tolerance.

Contact point length is marked on the dial face

- As the length of the contact point fitted affects the indicator's scale factor the length that gives a scale factor of unity is marked on the dial face to assist a customer when ordering the correct replacement contact point.

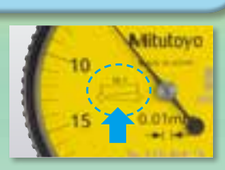

No bezel detachment

- A flange prevents the bezel from unintentional removal due to applying a force to the bezel during handling.

Conventional New

Inspection certificate attached

- A "Certificate of Inspection" is provided with Dial Test Indicators.

Naming of parts

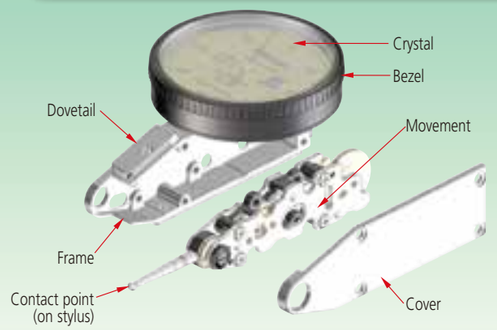

Improved contact point bearing gives smoother tracking

- The conventional method of mounting the contact point pivot bearing screw in the frame is prone to allowing looseness to develop with prolonged use. A unique sub-plate structure to house this screw has now been incorporated in all models and eliminates this issue.

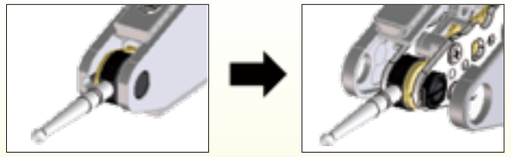

Contact point bearing screw held in frame. Contact point bearing screw held in sub-plate.

Extended contact point length for 0.001 mm, 0.002 mm, and 0.0001 in graduation models

- Longer contact points have been introduced on the most sensitive indicators to make probing those features of a workpiece that are difficult to access more user-friendly.

0.002 mm graduation models: L_1 now 18.7 mm, was 14.7 mm
L_2 now 15.2 mm, was 11.2 mm
0.001 mm graduation models: L_1 now 14.7 mm, was 12.8 mm
L_2 now 11.2 mm, was 9.3 mm
0.0001 in graduation models: L_1 now 0.75 in, was 0.59 in
L_2 now 0.61 in, was 0.45 in

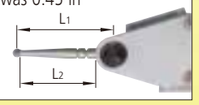

Ruby ball-tipped contact point added to lineup

- A ruby tip has resistance to wear several times greater than a carbide tip and, since it is nonconductive, it can be used with safety even on an electrical discharge machine.

A choice of dial position

Our product lineup offers four models, each with a different orientation of the dial on the frame to allow best visibility of the dial face in any specific situation.

- Horizontal type: the standard model - the dial is on top of the frame.
- Vertical type: the model with the dial on the end of the frame.
- Horizontal (20° tilted face) type: the model with the dial on top of the frame but tilted backward at 20°.
- Parallel type: the model with the dial on the side of the frame.

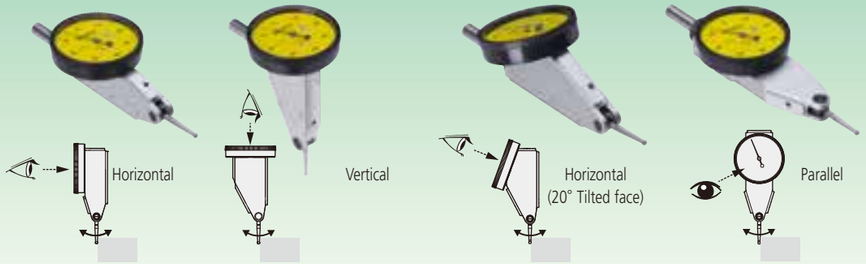

Mitutoyo

Lever Type Dial Indicator
Pocket Type Dial Test Indicator

Improved visibility

- Using universal fonts, changing dial face color and reviewing the relationship between pointer and scale marks have drastically improved visibility.


Conventional New

Attachable limit hands

- Limit hands (optional) can be attached to the bezel the same as for dial indicators, allowing easy identification of the upper and lower limits of tolerance.

Contact point length is marked on the dial face

- As the length of the contact point fitted affects the indicator's scale factor the length that gives a scale factor of unity is marked on the dial face to assist a customer when ordering the correct replacement contact point.

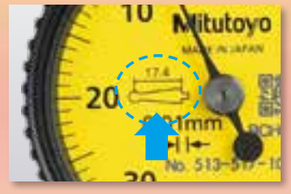

Integrated bezel and crystal structure

- Bonding the bezel and crystal together leaves no gap for cutting fluid or oil to penetrate through to the dial face.

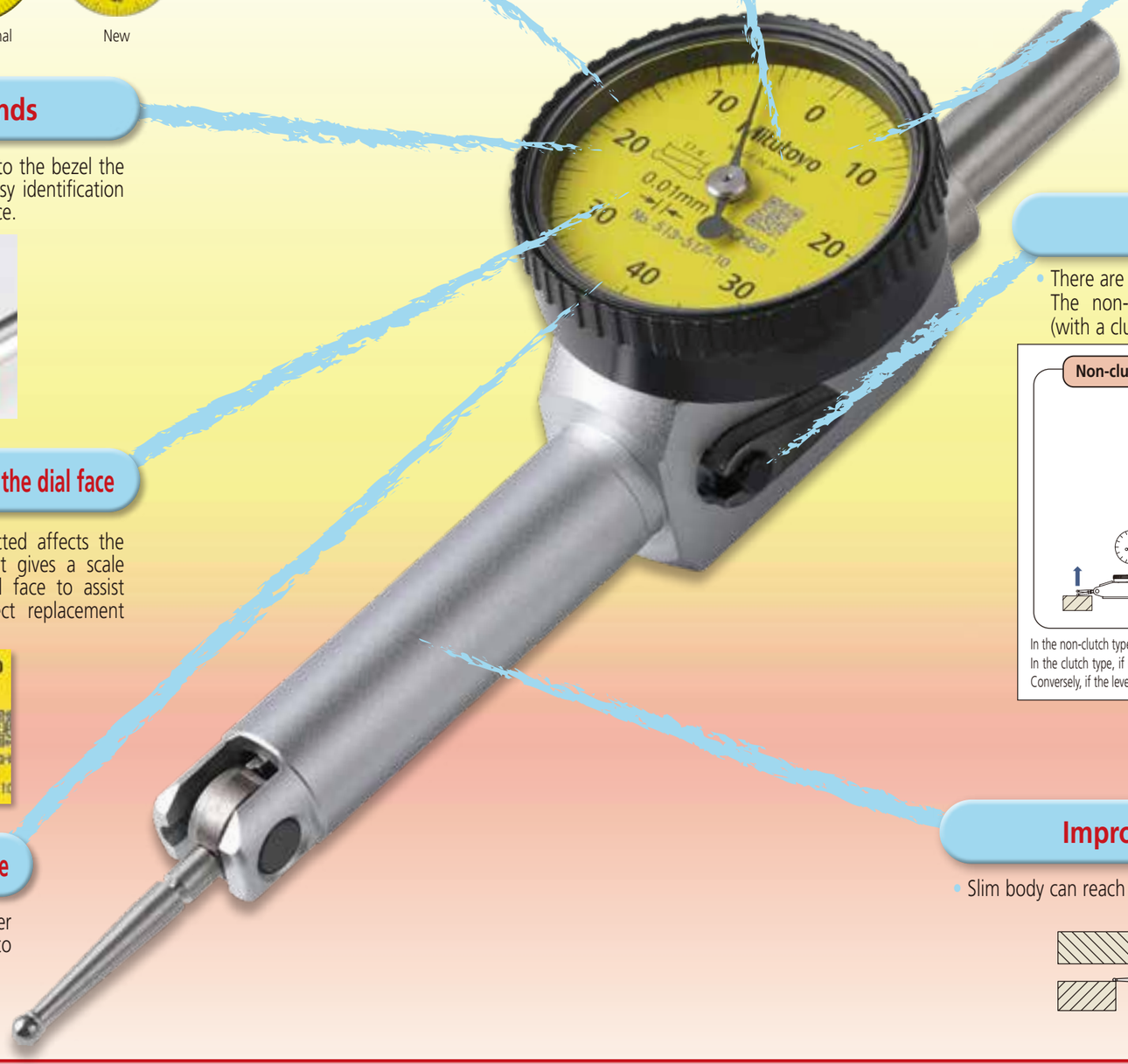

Inspection certificate attached

- A "Certificate of Inspection" is provided with Pocket Type Dial Test Indicators.

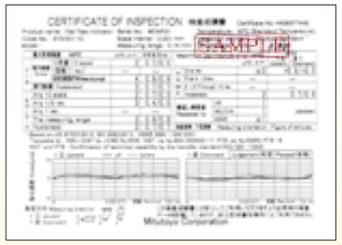

Easy-to-read dial

- Glare-free flat crystal face allows easy reading of graduations.
- Multi-layer and composite coatings allow a stain repellent, anti-reflective crystal.


Conventional New

Clutch type (with a clutch lever)

- There are two types of Mitutoyo Dial Test Indicator:
  The non-clutch type (without a clutch lever) and the clutch type (with a clutch lever)

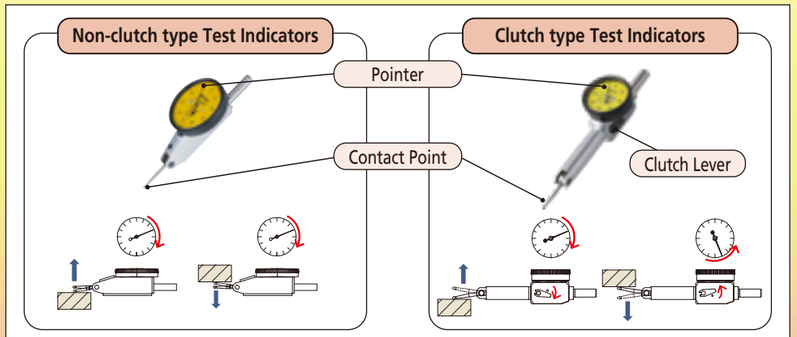

In the non-clutch type, although the contact point may move either in the upward or downward direction, the pointer always rotates clockwise. In the clutch type, if the clutch lever is set in one position the contact point moves in the upward direction and the pointer rotates clockwise. Conversely, if the lever is set in the other position the contact point moves in the downward direction and the pointer rotates counterclockwise.

Improved insertion depth

- Slim body can reach a shallow and deep space to be measured.

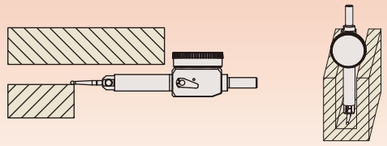

Mitutoyo

Horizontal (Standard model)

Metric Provides wide variations of models conforms to the required accuracy, range, and surface of workpieces.

513-424-10E / 513-424-10A / 513-424-10T

Contact point No. 137557

Graduation: 0.01 mm
Range: 0.5 mm

- Standard
- Double scale spacing
- Carbide contact point

513-414-10E / 513-414-10A / 513-414-10T

Contact point No. 131324

Graduation: 0.01 mm
Range: 0.5 mm

- Long contact point
- Double scale spacing
- Carbide contact point

513-478-10E

Contact point No. 21CZA210

Graduation: 0.01 mm
Range: 0.5 mm

- Standard
- Double scale spacing
- Ruby contact point

513-474-10E

Contact point No. 21CZA201

Graduation: 0.01 mm
Range: 0.8 mm

- Standard
- Ruby contact point

513-466-10E

Contact point No. 137557

Graduation: 0.01 mm
Range: 0.5 mm

- Double scale spacing
- Compact
- Carbide contact point

513-464-10E

Contact point No. 103006

Graduation: 0.01 mm
Range: 0.8 mm

- Compact
- Carbide contact point

513-404-10E / 513-404-10A / 513-404-10T

Contact point No. 103006

Graduation: 0.01 mm
Range: 0.8 mm

- Standard
- Carbide contact point

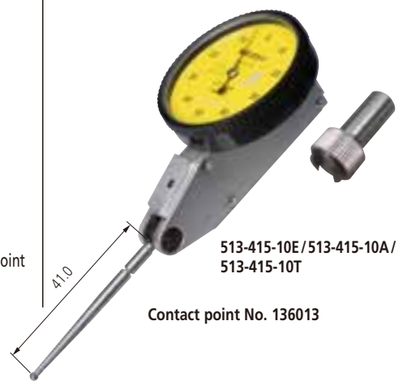

513-415-10E / 513-415-10A / 513-415-10T

Contact point No. 136013

Graduation: 0.01 mm
Range: 1.0 mm

- Long contact point
- Carbide contact point

513-477-10E

Contact point No. 21CZA211

Graduation: 0.01 mm
Range: 1.0 mm

- Long contact point
- Ruby contact point

513-475-10E

Contact point No. 21CZB068

Graduation: 0.002 mm
Range: 0.2 mm

- Standard
- Ruby contact point

513-426-10E / 513-426-10A

Contact point No. 137557

Graduation: 0.01 mm
Range: 1.5 mm

- With revolution counter
- Double scale spacing
- Carbide contact point

513-425-10E / 513-425-10A

Contact point No. 103011

Graduation: 0.002 mm
Range: 0.6 mm

- With revolution counter
- Carbide contact point

513-405-10E / 513-405-10A / 513-405-10T

Contact point No. 103011

Graduation: 0.002 mm
Range: 0.2 mm

- Standard
- Carbide contact point

513-465-10E

Contact point No. 103011

Graduation: 0.002 mm
Range: 0.2 mm

- Compact
- Carbide contact point

513-471-10E

Contact point No. 21CZA209

Graduation: 0.001 mm
Range: 0.14 mm

- High accuracy
- Ruby contact point

513-401-10E

Contact point No. 103010

Graduation: 0.001 mm
Range: 0.14 mm

- High accuracy
- Carbide contact point

Mitutoyo

Horizontal (Standard model)

Inch

513-402-10E / 513-402-10T

Contact point No. 133195

Graduation: 0.0005 in
Range: 0.03 in

Standard
Carbide contact point

513-462-10E

Contact point No. 133195

Graduation: 0.0005 in
Range: 0.03 in

Compact
Carbide contact point

513-472-10E

Contact point No. 21CZA204

Graduation: 0.0005 in
Range: 0.03 in

Standard
Ruby contact point

513-403-10E / 513-403-10T

Contact point No. 21CZB064

Graduation: 0.0001 in
Range: 0.008 in

Standard
Carbide contact point

513-412-10E / 513-412-10T

Contact point No. 136290

Graduation: 0.0005 in
Range: 0.03 in

Long contact point
Carbide contact point

513-473-10E

Contact point No. 21CZB112

Graduation: 0.0001 in
Range: 0.008 in

Standard
Ruby contact point

513-479-10E

Contact point No. 21CZA214

Graduation: 0.0005 in
Range: 0.03 in

Long contact point
Ruby contact point

513-463-10E

Contact point No. 21CZB064

Graduation: 0.0001 in
Range: 0.008 in

Compact
Carbide contact point

Metric / inch

513-409-10E / 513-409-10T

Contact point No. 103011

Graduation: 0.002 mm / 0.0001 in
Range: 0.2 mm / 0.0076 in

Carbide contact point

Inch / Metric

513-406-10E / 513-406-10T

Contact point No. 133195

Graduation: 0.0005 in / 0.01 mm
Range: 0.03 in / 0.7 mm

Carbide contact point

DIMENSIONS

Horizontal

Unit: mm

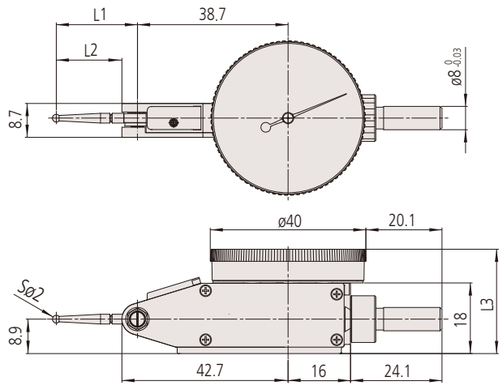

Type	Order No.	L1	L2	L3
Horizontal	**513-401-10E**	14.7	11.2	27
	513-471-10E			
	513-405-10E / A / T	18.7	15.2	
	513-475-10E			
	513-425-10E / A			28
	513-404-10E / A / T	20.9	17.4	27
	513-474-10E			
	513-424-10E / A / T	22.2	18.7	
	513-426-10E / A			28
	513-478-10E			27
	513-414-10E / A / T	37.4	33.9	
	513-415-10E / A / T	44.5	41.0	
	513-477-10E			

Compact

Unit: mm

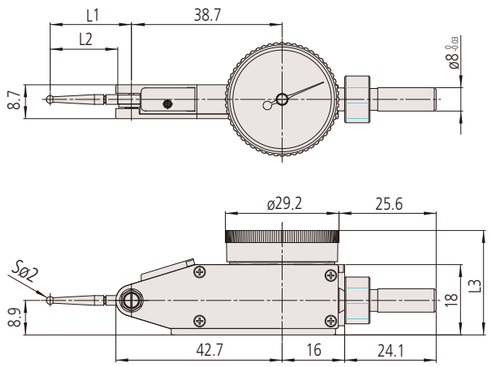

Type	Order No.	L1	L2	L3
Compact	**513-465-10E**	18.7	15.2	27
	513-464-10E	20.9	17.4	
	513-466-10E	22.2	18.7	

Note: A slight difference may occur depending on the center of the contact point, graduation plate, and stem fixing position, etc.

Horizontal (Standard model)

SPECIFICATIONS

Metric

Order No. Basic set	Plus set	Full set	Graduation (mm)	Range (mm)	Dial reading	Maximum permissible error (MPE)* (µm) Measuring range	One rev.	10 scale divisions	Hysteresis	Repetability	Mass (g)	Measuring force (N)	High accuracy	With revolution counter	Long contact point	Standard	Double scale spacing	Compact	Carbide contact point	Ruby contact point
513-424-10E	**513-424-10A**	**513-424-10T**	0.01	0.5	0-25-0	6	–	5	4	3	45	0.3 or less				✓	✓		✓	
513-478-10E	–	–														✓	✓			✓
513-466-10E	–	–									41	0.3 or less					✓	✓	✓	
513-404-10E	**513-404-10A**	**513-404-10T**		0.8	0-40-0	9					45					✓			✓	
513-414-10E	**513-414-10A**	**513-414-10T**		0.5	0-25-0	10			5			0.2 or less			✓		✓		✓	
513-474-10E	–	–		0.8	0-40-0	9			4			0.3 or less				✓				✓
513-464-10E	–	–									41							✓	✓	
513-415-10E	**513-415-10A**	**513-415-10T**		1.0	0-50-0	10			5		45	0.2 or less			✓				✓	
513-477-10E	–	–													✓					✓
513-426-10E	**513-426-10A**	–		1.5	0-25-0	16	10					0.4 or less		✓			✓		✓	
513-405-10E	**513-405-10A**	**513-405-10T**	0.002	0.2	0-100-0	4	–	2	3	1		0.3 or less				✓			✓	
513-471-10E	–	–	0.001	0.14	0-70-0								✓							✓
513-475-10E	–	–	0.002	0.2	0-100-0											✓				✓
513-425-10E	**513-425-10A**	–		0.6		7	5		4			0.4 or less		✓					✓	
513-465-10E	–	–		0.2		4	–		3		41	0.3 or less						✓	✓	
513-401-10E	–	–	0.001	0.14	0-70-0						45		✓						✓	

Inch

Order No. Basic set	Plus set	Full set	Graduation (in)	Range (in)	Dial reading	Maximum permissible error (MPE)* (in) One rev.	Hysteresis	Repetability	Mass (g)	Measuring force (N)	High accuracy	With revolution counter	Long contact point	Standard	Double scale spacing	Compact	Carbide contact point	Ruby contact point
513-402-10E	–	**513-402-10T**	0.0005	0.03	0-15-0	±0.0005	0.0002	±0.0002	45	0.3 or less				✓			✓	
513-472-10E	–	–												✓				✓
513-412-10E	–	**513-412-10T**								0.2 or less			✓				✓	
513-479-10E	–	–											✓					✓
513-462-10E	–	–							41	0.3 or less						✓	✓	
513-403-10E	–	**513-403-10T**	0.0001	0.008	0-4-0	±0.0001	0.0001	±0.00004	45					✓			✓	
513-473-10E	–	–												✓				✓
513-463-10E	–	–							41							✓	✓	

Metric/Inch

Order No. Basic set	Plus set	Full set	Graduation	Range	Dial reading	Maximum permissible error (MPE)* (µm) Measuring range	10 scale divisions	Hysteresis	Repetability	Mass (g)	Measuring force (N)	High accuracy	With revolution counter	Long contact point	Standard	Double scale spacing	Compact	Carbide contact point	Ruby contact point
513-409-10E	–	**513-409-10T**	0.002 mm /0.0001 in	0.2 mm /0.0076 in	0-10-0 /0-38-0	4	2	3	1	45	0.3 or less							✓	

Inch/Metric

Order No. Basic set	Plus set	Full set	Graduation	Range	Dial reading	Maximum permissible error (MPE)* (in) One rev.	Hysteresis	Repetability	Mass (g)	Measuring force (N)	High accuracy	With revolution counter	Long contact point	Standard	Double scale spacing	Compact	Carbide contact point	Ruby contact point
513-406-10E	–	**513-406-10T**	0.0005 in /0.01 mm	0.03 in /0.7 mm	0-15-0 /0-35-0	±0.0005	0.0002	±0.0002	45	0.3 or less							✓	

* We guarantee the accuracy of completed products by inspecting them with the dial face facing upward.
Note 1: Be sure to perform calibration with reference gage, etc. after exchanging the contact point. The inside parts may be damaged when the contact point is exchanged due to the breakage.
In the case the of the significant deterioration in the operation, repair is required.
Note 2: Stem with dovetail groove is not included in the mass.
Note 3: **513-4XX-10** is indicated on the dial face. But the Order No. for the Special Set provided with the stem etc. has a suffix (E or T) at the end.

Parallel (The scale can be read from the front, with the contact point pivoting in a plane parallel to that of the dial face)

Metric

513-484-10E / 513-484-10A / 513-484-10T

Contact point No. 103006

Graduation: 0.01 mm
Range: 0.8 mm

Carbide contact point

513-486-10E

Contact point No. 137557

Graduation: 0.01 mm
Range: 0.5 mm

Double scale spacing
Carbide contact point

513-485-10E

Contact point No. 103011

Graduation: 0.002 mm
Range: 0.2 mm

Carbide contact point

Inch

513-482-10A / 513-482-10T

Contact point No. 133195

Graduation: 0.0005 in
Range: 0.03 in

Carbide contact point

SPECIFICATIONS

Metric

Order No. Basic set	Plus set	Full set	Graduation (mm)	Range (mm)	Dial reading	Maximum permissible error (MPE)* (µm) Measuring range	10 scale divisions	Hysteresis	Repetability	Mass (g)	Measuring force (N)	High accuracy	With revolution counter	Long contact point	Standard	Double scale spacing	Compact	Carbide contact point	Ruby contact point
513-484-10E	**513-484-10A**	**513-484-10T**	0.01	0.8	0-40-0	9	5	4	3	53	0.3 or less							✓	
513-485-10E	–	–	0.002	0.2	0-100-0	4	2	3	1									✓	
513-486-10E	–	–	0.01	0.5	0-25-0	6	5	4	3							✓		✓	

Inch

Order No. Basic set	Plus set	Full set	Graduation (in)	Range (in)	Dial reading	Maximum permissible error (MPE)* (in) One rev.	Hysteresis	Repetability	Mass (g)	Measuring force (N)	High accuracy	With revolution counter	Long contact point	Standard	Double scale spacing	Compact	Carbide contact point	Ruby contact point
–	**513-482-10A**	**513-482-10T**	0.0005	0.03	0-15-0	±0.0005	0.0002	±0.0002	53	0.3 or less							✓	

* We guarantee the accuracy of completed products by inspecting them with the dial face vertical.
Note 1: Be sure to perform calibration with reference gage, etc. after exchanging the contact point. The inside parts may be damaged when the contact point is exchanged due to the breakage.
In the case the of the significant deterioration in the operation, repair is required.
Note 2: Stem with dovetail groove is not included in the mass.
Note 3: **513-4XX-10** is indicated on the dial face. But the Order No. for the Special Set provided with the stem etc. has a suffix (E or T) at the end.

DIMENSIONS

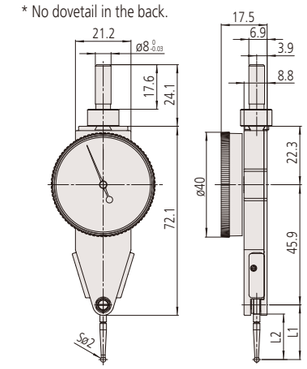

Unit: mm

Order No.	L1	L2
513-484-10E	20.9	17.4
513-485-10E	18.7	15.2
513-486-10E	22.2	18.7

Note: A slight difference may occur depending on the center of the contact point, graduation plate, and stem fixing position, etc.

Mitutoyo

Vertical (Best suited for centering holes under the spindle of a machine tool)

Metric

513-454-10E / 513-454-10A / 513-454-10T

Contact point No. 103006

Graduation: 0.01 mm
Range: 0.8 mm

Carbide contact point

513-455-10E / 513-455-10A / 513-455-10T

Contact point No. 103011

Graduation: 0.002 mm
Range: 0.2 mm

Carbide contact point

513-456-10E

Contact point No. 137557

Graduation: 0.01 mm
Range: 0.5 mm

Double scale spacing
Carbide contact point

Inch

513-452-10E / 513-452-10T

Contact point No. 133195

Graduation: 0.0005 in
Range: 0.03 in

Carbide contact point

513-453-10E / 513-453-10T

Contact point No. 21CZB064

Graduation: 0.0001 in
Range: 0.008 in

Carbide contact point

SPECIFICATIONS

Metric

Order No.			Graduation (mm)	Range (mm)	Dial reading	Maximum permissible error (MPE)* (µm)				Mass (g)	Measuring force (N)	High accuracy	With revolution counter	Long contact point	Standard	Double scale spacing	Compact	Carbide contact point	Ruby contact point
Basic set	Plus set	Full set				Measuring range	10 scale divisions	Hysteresis	Repetability										
513-454-10E	**513-454-10A**	**513-454-10T**	0.01	0.8	0-40-0	9	5	4	3	46	0.3 or less							✓	
513-455-10E	**513-455-10A**	**513-455-10T**	0.002	0.2	0-100-0	4	2	3	1									✓	
513-456-10E	–	–	0.01	0.5	0-25-0	6	5	4	3							✓		✓	

Inch

Order No.			Graduation (in)	Range (in)	Dial reading	Maximum permissible error (MPE)* (in)			Mass (g)	Measuring force (N)	High accuracy	With revolution counter	Long contact point	Standard	Double scale spacing	Compact	Carbide contact point	Ruby contact point
Basic set	Plus set	Full set				One rev.	Hysteresis	Repetability										
513-452-10E	–	**513-452-10T**	0.0005	0.03	0-15-0	±0.0005	0.0002	±0.0002	46	0.3 or less							✓	
513-453-10E	–	**513-453-10T**	0.0001	0.008	0-4-0	±0.0001	0.0001	±0.00004									✓	

* We guarantee the accuracy of completed products by inspecting them with the dial face facing upward.
Note 1: Be sure to perform calibration with reference gage, etc. after exchanging the contact point. The inside parts may be damaged when the contact point is exchanged due to the breakage. In the case the of the significant deterioration in the operation, repair is required.
Note 2: Stem with dovetail groove is not included in the mass.
Note 3: **513-4XX-10** is indicated on the dial face. But the Order No. for the Special Set provided with the stem etc. has a suffix (E or T) at the end.

DIMENSIONS

Unit: mm

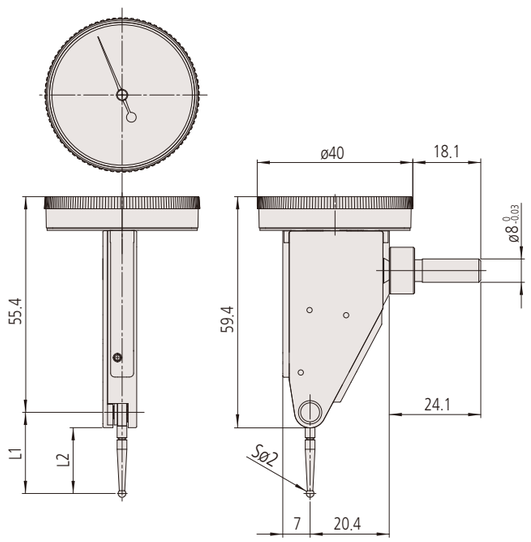

Order No.	L1	L2
513-454-10E	20.9	17.4
513-455-10E	18.7	15.2
513-456-10E	22.2	18.7

Note: A slight difference may occur depending on the center of the contact point, graduation plate, and stem fixing position, etc.

Horizontal (20° Tilted Face) (Dial face inclined 20°, compared with the vertical type, allows easy reading)

Metric

513-444-10E / 513-444-10A / 513-444-10T

Contact point No. 103006

Graduation: 0.01 mm
Range: 1.6 mm

With revolution counter
Carbide contact point

513-445-10E / 513-445-10A / 513-445-10T

Contact point No. 103011

Graduation: 0.002 mm
Range: 0.4 mm

With revolution counter
Carbide contact point

Inch

513-442-10A / 513-442-10T

Contact point No. 133195

Graduation: 0.0005 in
Range: 0.06 in

With revolution counter
Carbide contact point

513-442-16A / 513-442-16T

Contact point No. 133195

Graduation: 0.0005 in
Range: 0.06 in

With revolution counter
Carbide contact point

513-446-10A / 513-446-10T

Contact point No. 136290

Graduation: 0.0005 in
Range: 0.06 in

With revolution counter
Long contact point
Carbide contact point

513-446-16A / 513-446-16T

Contact point No. 136290

Graduation: 0.0005 in
Range: 0.06 in

With revolution counter
Long contact point
Carbide contact point

513-443-10A / 513-443-10T

Contact point No. 21CZB064

Graduation: 0.0001 in
Range: 0.016 in

With revolution counter
Carbide contact point

513-443-16A / 513-443-16T

Contact point No. 21CZB064

Graduation: 0.0001 in
Range: 0.016 in

With revolution counter
Carbide contact point

SPECIFICATIONS

Metric

Order No.			Graduation (mm)	Range (mm)	Dial reading	Maximum permissible error (MPE)* (µm)					Mass (g)	Measuring force (N)	High accuracy	With revolution counter	Long contact point	Standard	Double scale spacing	Compact	Carbide contact point	Ruby contact point
Basic set	Plus set	Full set				Measuring range	One rev.	10 scale divisions	Hysteresis	Repetability										
513-444-10E	**513-444-10A**	**513-444-10T**	0.01	1.6	0-40-0	16	10	5	5	3	48	0.3 or less		✓					✓	
513-445-10E	**513-445-10A**	**513-445-10T**	0.002	0.4	0-100-0	6	5	2	4	1				✓					✓	

Inch

Order No.			Graduation (in)	Range (in)	Dial reading	Maximum permissible error (MPE)* (in)				Mass (g)	Measuring force (N)	High accuracy	With revolution counter	Long contact point	Standard	Double scale spacing	Compact	Carbide contact point	Ruby contact point
Basic set	Plus set	Full set				One rev.	First 2.5 rev.	Hysteresis	Repetability										
–	**513-442-10A**	**513-442-10T**	0.0005	0.06	0-15-0	±0.0005	±0.0005	0.0002	±0.0002	48	0.3 or less		✓					✓	
–	**513-442-16A**	**513-442-16T**											✓					✓	
–	**513-446-10A**	**513-446-10T**									0.2 or less		✓	✓				✓	
–	**513-446-16A**	**513-446-16T**											✓	✓				✓	
–	**513-443-10A**	**513-443-10T**	0.0001	0.016	0-4-0	±0.0002	±0.0002	0.0001	±0.00004		0.3 or less		✓					✓	
–	**513-443-16A**	**513-443-16T**											✓					✓	

* We guarantee the accuracy of completed products by inspecting them with the dial face facing upward.
Note 1: Be sure to perform calibration with reference gage, etc. after exchanging the contact point. The inside parts may be damaged when the contact point is exchanged due to the breakage.
In the case the of the significant deterioration in the operation, repair is required.
Note 2: Stem with dovetail groove is not included in the mass.
Note 3: **513-4XX-10** is indicated on the dial face. But the Order No. for the Special Set provided with the stem etc. has a suffix (E or T) at the end.

DIMENSIONS

Unit: mm

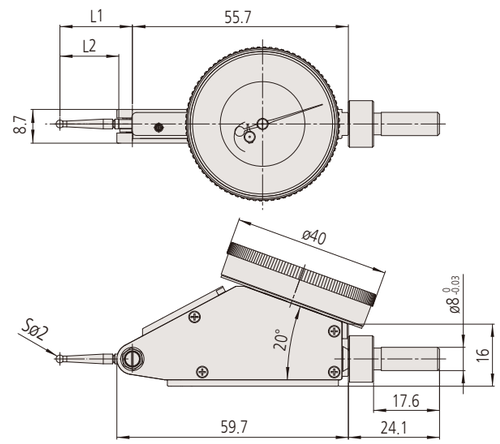

Order No.	L1	L2
513-445-10E	18.7	15.2
513-444-10E	20.9	17.4

Note: A slight difference may occur depending on the center of the contact point, graduation plate, and stem fixing position, etc.

Mitutoyo

Pocket Type (Slim design is suited for measurement in deep holes)

Clutch type (with a clutch lever)

NEW Products

Metric

513-517-10E/513-517-10T

Contact point No. 103006

Graduation: 0.01 mm
Range: 0.8 mm

- Standard
- Compact
- Carbide contact point

513-515-10E/513-515-10T

Contact point No. 136013

Graduation: 0.01 mm
Range: 1 mm

- Long contact point
- Compact
- Carbide contact point

513-501-10E/513-501-10T

Contact point No. 136104

Graduation: 0.001 mm
Range: 0.14 mm

- High accuracy
- Compact
- Carbide contact point

513-514-10E/513-514-10T

Contact point No. 129949

Graduation: 0.01 mm
Range: 0.5 mm

- Long contact point
- Double scale spacing
- Compact
- Carbide contact point

513-503-10E/513-503-10T

Contact point No. 103010

Graduation: 0.002 mm
Range: 0.2 mm

- Standard
- Compact
- Carbide contact point

Inch

513-518-10E/513-518-10T

Contact point No. 103007

Graduation: 0.001 in
Range: 0.04 in

- Compact
- Carbide contact point

513-512-10E/513-512-10T

Contact point No. 131324

Graduation: 0.0005 in
Range: 0.02 in

- Long contact point
- Double scale spacing
- Compact
- Carbide contact point

513-504-10E/513-504-10T

Contact point No. 103011

Graduation: 0.0001 in
Range: 0.01 in

- Compact
- Carbide contact point

SPECIFICATIONS

Metric

Order No. Basic set	Order No. Full set	Graduation (mm)	Range (mm)	Dial reading	Maximum permissible error (MPE)* (µm) Measuring range	One rev.	10 scale divisions	Hysteresis	Repetability	Mass (g)	Measuring force (N)	High accuracy	With revolution counter	Long contact point	Standard	Double scale spacing	Compact	Carbide contact point	Ruby contact point
513-517-10E	**513-517-10T**	0.01	0.8	0-40-0	9	–	5	4	3	50	0.3 or less				✓		✓	✓	
513-514-10E	**513-514-10T**	0.01	0.5	0-25-0	10	–	5	5	3	51	0.3 or less			✓		✓	✓	✓	
513-515-10E	**513-515-10T**	0.01	1	0-50-0	10	–	5	5	3	51	0.3 or less			✓			✓	✓	
513-503-10E	**513-503-10T**	0.002	0.2	0-100-0	4	–	2	3	1	50	0.4 or less				✓		✓	✓	
513-501-10E	**513-501-10T**	0.001	0.14	0-70-0	4	–	2	3	1	50	0.5 or less	✓					✓	✓	

Inch

Order No. Basic set	Order No. Full set	Graduation (in)	Range (in)	Dial reading	Maximum permissible error (MPE)* (in) One rev.	First 2.5 rev.	Hysteresis	Repetability	Mass (g)	Measuring force (N)	High accuracy	With revolution counter	Long contact point	Standard	Double scale spacing	Compact	Carbide contact point	Ruby contact point
513-518-10E	**513-518-10T**	0.001	0.04	0-20-0	±0.001	-	0.0002	±0.0004	50	0.3 or less						✓	✓	
513-512-10E	**513-512-10T**	0.0005	0.02	0-10-0	±0.0005	-	0.0002	±0.0002	51	0.3 or less			✓		✓	✓	✓	
513-504-10E	**513-504-10T**	0.0001	0.01	0-5-0	±0.0002	-	0.0001	±0.00004	50	0.3 or less						✓	✓	

* We guarantee the accuracy of completed products by inspecting them with the dial face facing upward.
Note 1: Be sure to perform calibration with reference gage, etc. after exchanging the contact point. The inside parts may be damaged when the contact point is exchanged due to the breakage. In the case the of the significant deterioration in the operation, repair is required.
Note 2: Stem is not included in the mass.
Note 3: **513-5XX-10** is indicated on the dial face. But the Order No. for the Special Set provided with the stem etc. has a suffix (E or T) at the end.

DIMENSIONS

Unit: mm

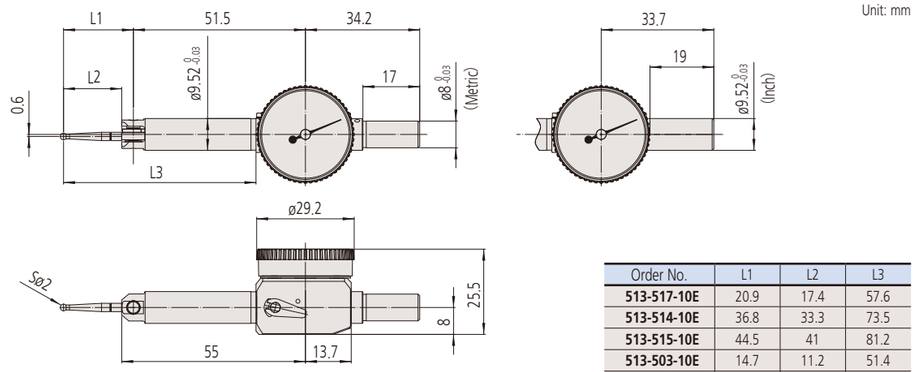

Order No.	L1	L2	L3
513-517-10E	20.9	17.4	57.6
513-514-10E	36.8	33.3	73.5
513-515-10E	44.5	41	81.2
513-503-10E	14.7	11.2	51.4
513-501-10E	12.1	8.6	48.7

Note: A slight difference may occur depending on the center of the contact point, graduation plate, and stem fixing position, etc.

Pocket type can be fixed at the body (at ø9.52)

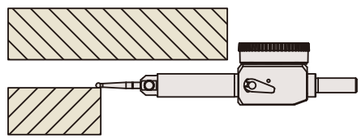

The slim body allows measurements in shallow space.

Set configuration

Horizontal

Horizontal (20° tilted face)

Parallel

Vertical

Pocket type

Metric and Metric / Inch

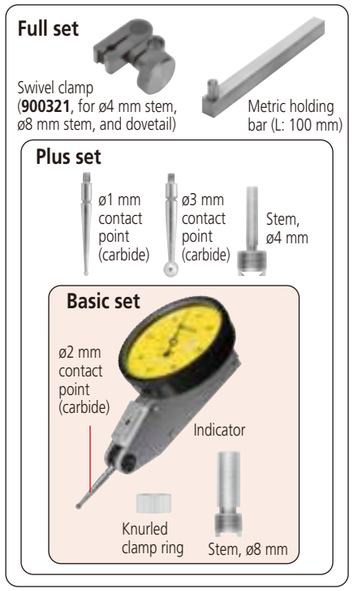

Metric

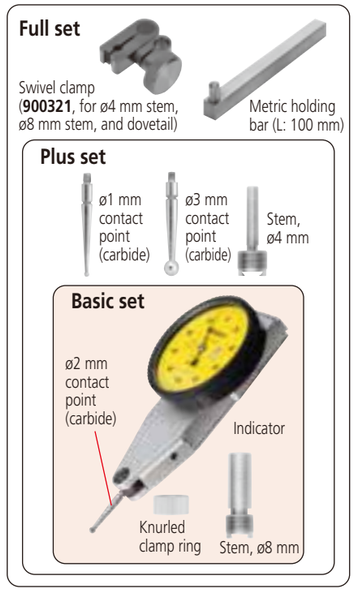

Metric

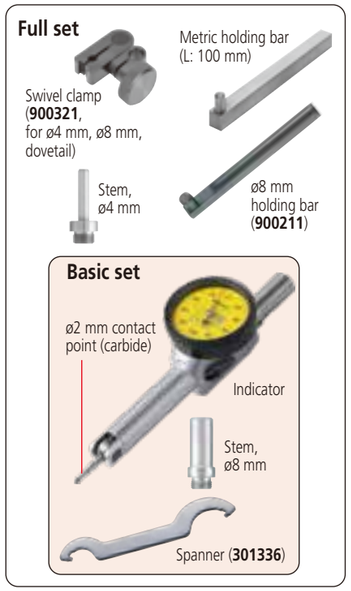

Inch and Inch / Metric

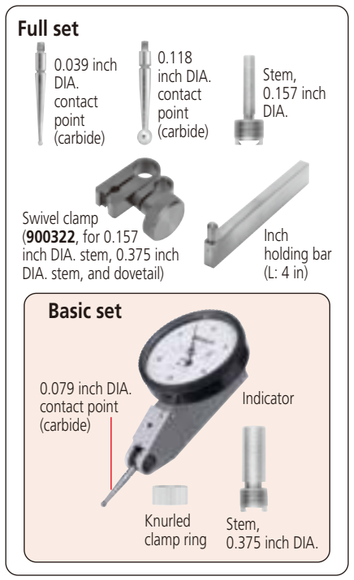

Inch

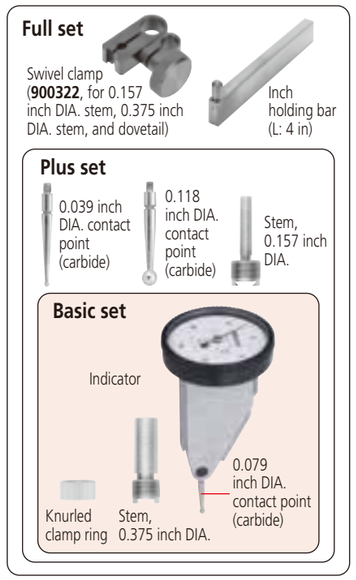

Inch

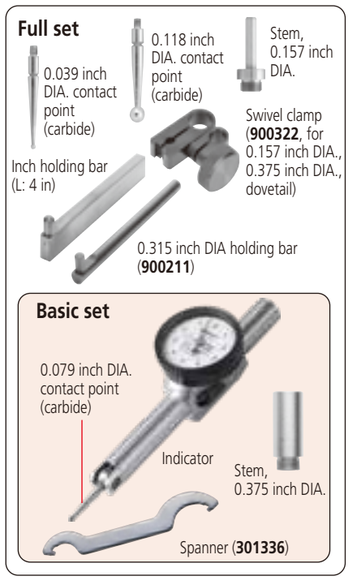

External dimensions of contact points for dial test indicators

The length of the contact point is specific to each indicator model. Always use the contact point designed for your model.

	L2 (mm)	øD (mm) ø0.5 steel	ø0.7 steel	ø1 carbide	ø2 carbide	ø2 ruby	ø3 carbide	Applicable model
	8.6	–	–	**136756**	**136104**	–	**136758**	**513-501-10E, 513-501-10T**
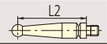	11.2	**190547**	**190548**	**103017**	**103010**	**21CZA209**	**103018**	**513-401-10E, 513-471-10E, 513-503-10E, 513-503-10T**
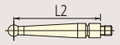	15.2	**21CAB109**	**21CAB110**	**131314**	**103011**	**21CZB068**	**131315**	**513-405-10A, 513-405-10E, 513-404-10T, 513-425-10A, 513-425-10E, 513-465-10E, 513-445-10A, 513-445-10E, 513-445-10T, 513-455-10A, 513-455-10E, 513-455-10T, 513-475-10E, 513-485-10E**
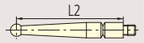	17.4	**190549**	**190550**	**103013**	**103006**	**21CZA201**	**103014**	**513-404-10A, 513-404-10E, 513-404-10T, 513-464-10E, 513-444-10A, 513-444-10E, 513-444-10T, 513-454-10A, 513-454-10E, 513-454-10T 513-484-10A, 513-484-10E, 513-484-10T, 513-474-10E, 513-517-10E, 513-517-10T**
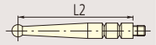	18.7	**190654**	**190653**	**137558**	**137557**	**21CZA210**	**137559**	**513-424-10A, 513-424-10E, 513-424-10T, 513-456-10E, 513-466-10E, 513-426-10A, 513-426-10E 513-478-10E, 513-486-10E**
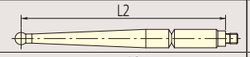	33.3	–	–	**137746**	**129949**	–	**137747**	**513-514-10E, 513-514-10T**
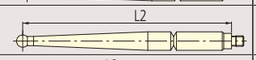	33.9	**21CAB111**	**21CAB112**	**131316**	**131324**	–	**131317**	**513-414-10A, 513-414-10E, 513-414-10T**
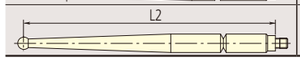	41.0	**190656**	**190655**	**136235**	**136013**	**21CZA211**	**136236**	**513-415-10A, 513-415-10E, 513-415-10T, 513-477-10E, 513-515-10E, 513-515-10T**

Note: Carbide contact point is slightly magnetic. ø1and ø3 contact points with non-conductive ruby ball which can be used for EDM machines are available by special order.

Contact point replacement

- To remove a contact point, wrap a soft waste cloth around the contact point and rotate it slowly while being pinched with pliers so as not to cause a scratch on it.
- After replacement of a contact point, the indicator must be calibrated against a reference. If a contact point is bent or broken, inner components might be damaged. In case of significant deterioration of accuracy or performance, the indicator needs to be repaired.
- Recommended tightening torque: 0.16 N·m

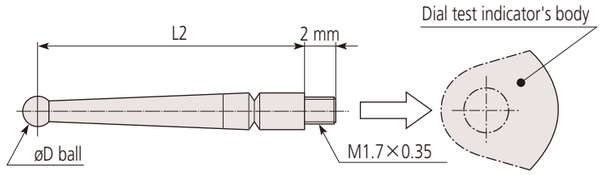

211 2112(4)g-(AK)CM-(JP5), Printed in Japan

Whatever your challenges are, Mitutoyo supports you from start to finish.

Mitutoyo is not only a manufacturer of top quality measuring products but one that also offers qualified support for the lifetime of the equipment, backed up by comprehensive services that ensure your staff can make the very best use of the investment.

Apart from the basics of calibration and repair, Mitutoyo offers product and metrology training, as well as IT support for the sophisticated software used in modern measuring technology. We can also design, build, test and deliver bespoke measuring solutions and even, if deemed cost-effective, take your critical measurement challenges in-house on a sub-contract basis.

Find additional product literature and our product catalogue

https://www.mitutoyo.co.jp/global.html

Our products are classified as regulated items under Japanese Foreign Exchange and Foreign Trade Law. Please consult us in advance if you wish to export our products to any other country.
If the purchased product is exported, even though it is not a regulated item (Catch-All controls item), the customer service available for that product may be affected. If you have any questions, please consult your local Mitutoyo sales office.

Mitutoyo Corporation
20-1, Sakado 1-Chome,
Takatsu-ku, Kawasaki-shi,
Kanagawa 213-8533, Japan
T +81 (0) 44 813-8230
F +81 (0) 44 813-8231
https://www.mitutoyo.co.jp