Roundtest (Roundform Measuring Instruments)

■ JIS B 7451-1997: Roundness measuring instruments
■ JIS B 0621-1984: Definition and notation of geometric deviations
■ JIS B 0021-1998: Geometric property specifications (GPS) of products – Geometric tolerance

○ Roundness
Any circumferential line must be contained within the tolerance zone formed between two coplanar circles with a difference in radii of t

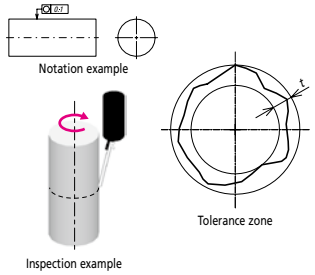

— Straightness
Any line on the surface must lie within the tolerance zone formed between two parallel straight lines a distance t apart and in the direction specified

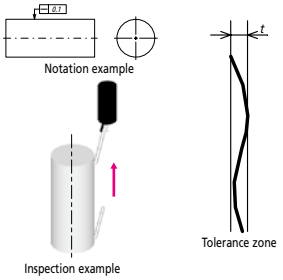

▱ Flatness
The surface must be contained within the tolerance zone formed between two parallel planes a distance t apart

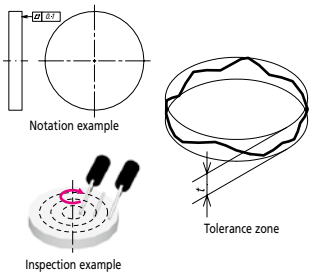

⌭ Cylindricity
The surface must be contained within the tolerance zone formed between two coaxial cylinders with a difference in radii of t

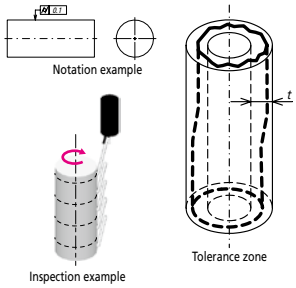

◎ Concentricity
The center point must be contained within the tolerance zone formed by a circle of diameter t concentric with the datum

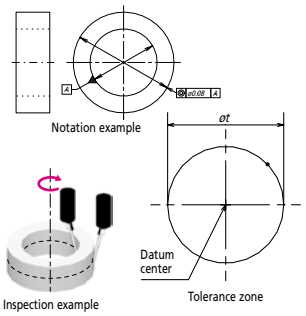

◎ Coaxiality
The axis must be contained within the tolerance zone formed by a cylinder of diameter t concentric with the datum

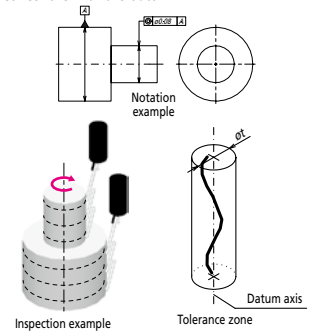

⊥ Perpendicularity
The line or surface must be contained within the tolerance zone formed between two planes a distance t apart and perpendicular to the datum

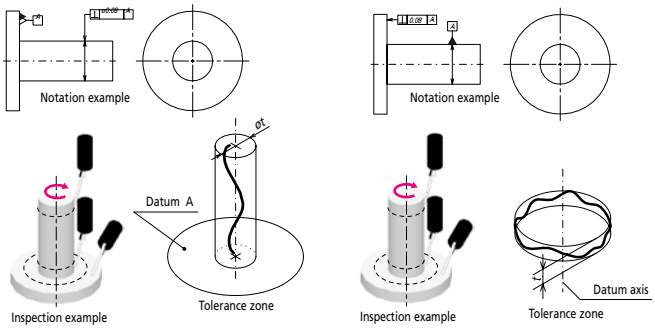

↗ Circular Runout
The line must be contained within the tolerance zone formed between two coplanar and/or concentric circles a distance t apart concentric with or perpendicular to the datum

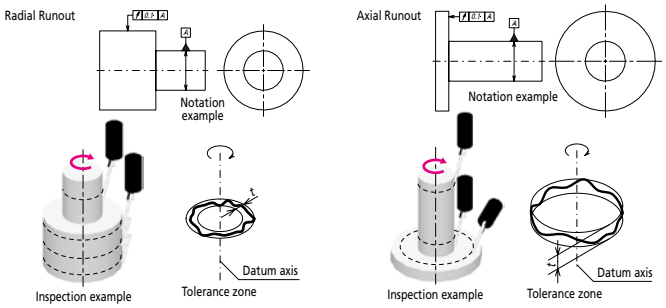

⌰ Total Runout
The surface must be contained within the tolerance zone formed between two coaxial cylinders with a difference in radii of t, or planes a distance t apart, concentric with or perpendicular to the datum

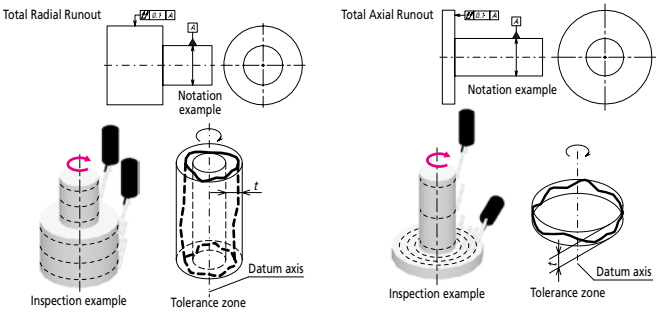

■ Adjustment prior to Measurement

Centering
A displacement offset (eccentricity) between the Roundtest's rotary table axis and that of the workpiece results in distortion of the measured form (limaçon error) and consequentially produces an error in the calculated roundness value. The larger the eccentricity, the larger is the error in calculated roundness. Therefore the workpiece should be centered (axes made coincident) before measurement.
Some roundness testers support accurate measurement with a limaçon error correction function.
The effectiveness of this function can be seen in the graph below.

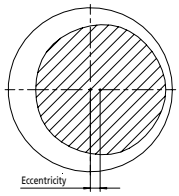

Effect of eccentricity compensation function

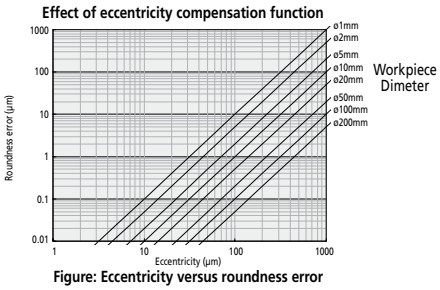

Figure: Eccentricity versus roundness error

Leveling
Any inclination of the axis of a workpiece with respect to the rotational axis of the measuring instrument will cause an elliptic error. Leveling must be performed so that these axes are sufficiently parallel.

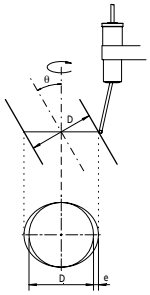

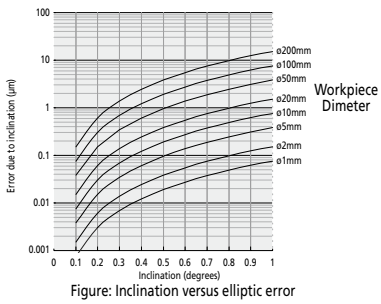

Figure: Inclination versus elliptic error

Roundness Testing

Effect of Filter Settings on the Measured Profile

Roundness values as measured are greatly affected by variation of filter cutoff value. It is necessary to set the filter appropriately for the evaluation required.

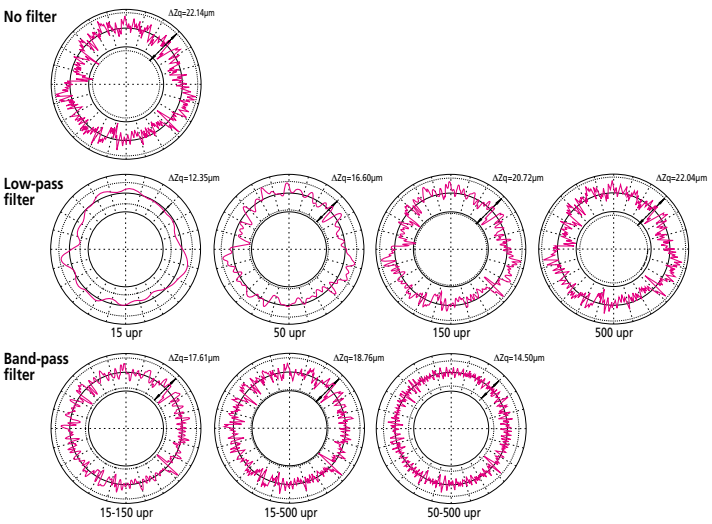

Evaluating the Measured Profile Roundness

Roundness testers use the measurement data to generate reference circles whose dimensions define the roundness value. There are four methods of generating these circles, as shown below, and each method has individual characteristics so the method that best matches the function of the workpiece should be chosen.

Least Square Circle (LSC) Method	Minimum Zone Circles (MZC) Method	Minimum Circumscribed Circle (MCC) Method	Maximum inscribed Circle (MIC) Method
A circle is fitted to the measured profile such that the sum of the squares of the departure of the profile data from this circle is a minimum. The roundness figure is then defined as the difference between the maximum departures of the profile from this circle (highest peak to the lowest valley).	Two concentric circles are positioned to enclose the measured profile such that their radial difference is a minimum. The roundness figure is then defined as the radial separation of these two circles.	The smallest circle that can enclose the measured profile is created. The roundness figure is then defined as the maximum departure of the profile from this circle. This circle is sometimes referred to as the 'ring gage' circle.	The largest circle that can be enclosed by the profile data is created. The roundness figure is then defined as the maximum departure of the profile from this circle. This circle is sometimes referred to as the 'plug gage' circle.

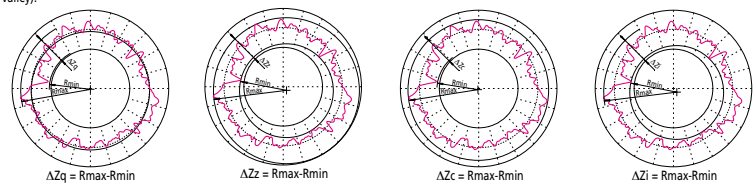

Traceability System for Roundform Measuring Instruments

(Traceability to PTB*)

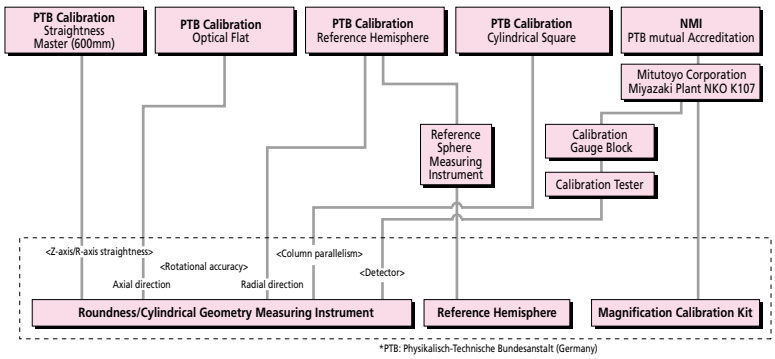

*PTB: Physikalisch-Technische Bundesanstalt (Germany)

Stylus Tip

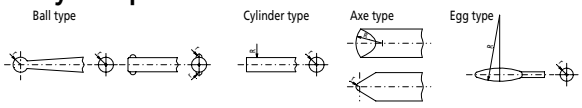

Tip shape: Ball, axe, cylinder, and egg
Tip radius : 0.25mm, 0.8mm, 2.5mm, 8mm, 25mm (tolerance: 30% of the nominal value)
Measuring force: 250mN or less

Undulations Per Revolution (UPR) data in the roundness graphs

Measurement result graphs

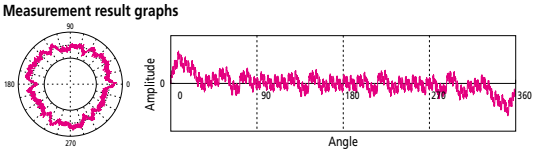

A 1 UPR condition indicates eccentricity of the workpiece relative to the rotational axis of the measuring instrument. The amplitude of undulation components depends on the leveling adjustment.

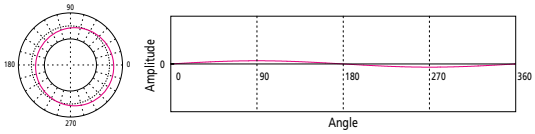

A 2 UPR condition may indicate: (1) insufficient leveling adjustment on the measuring instrument; (2) circular runout due to incorrect mounting of the workpiece on the machine tool that created its shape; (3) the form of the workpiece is elliptical by design as in, for example, an IC-engine piston.

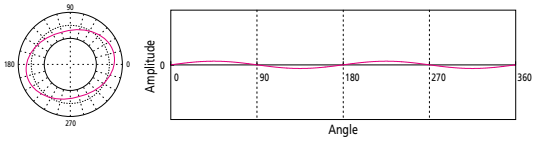

A 3 to 5 UPR condition may indicate: (1) Deformation due to over-tightening of the holding chuck on the measuring instrument; (2) Relaxation deformation due to stress release after unloading from the holding chuck on the machine tool that created its shape.

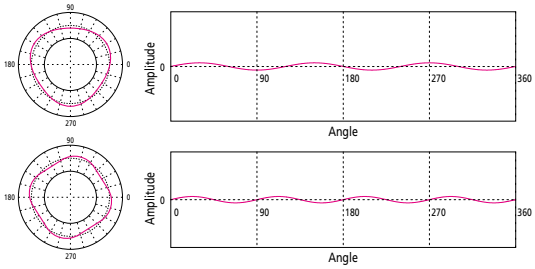

A 5 to 15 UPR condition often indicates unbalance factors in the machining method or processes used to produce the workpiece.

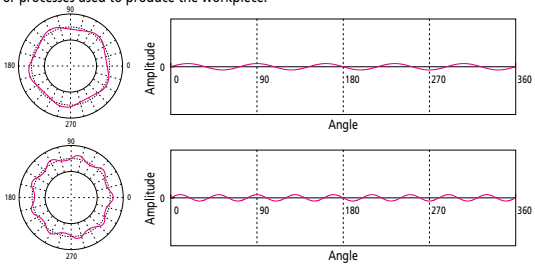

A 15 (or more) UPR condition is usually caused by tool chatter, machine vibration, coolant delivery effects, material non-homogeneity, etc., and is generally more important to the function than to the fit of a workpiece.